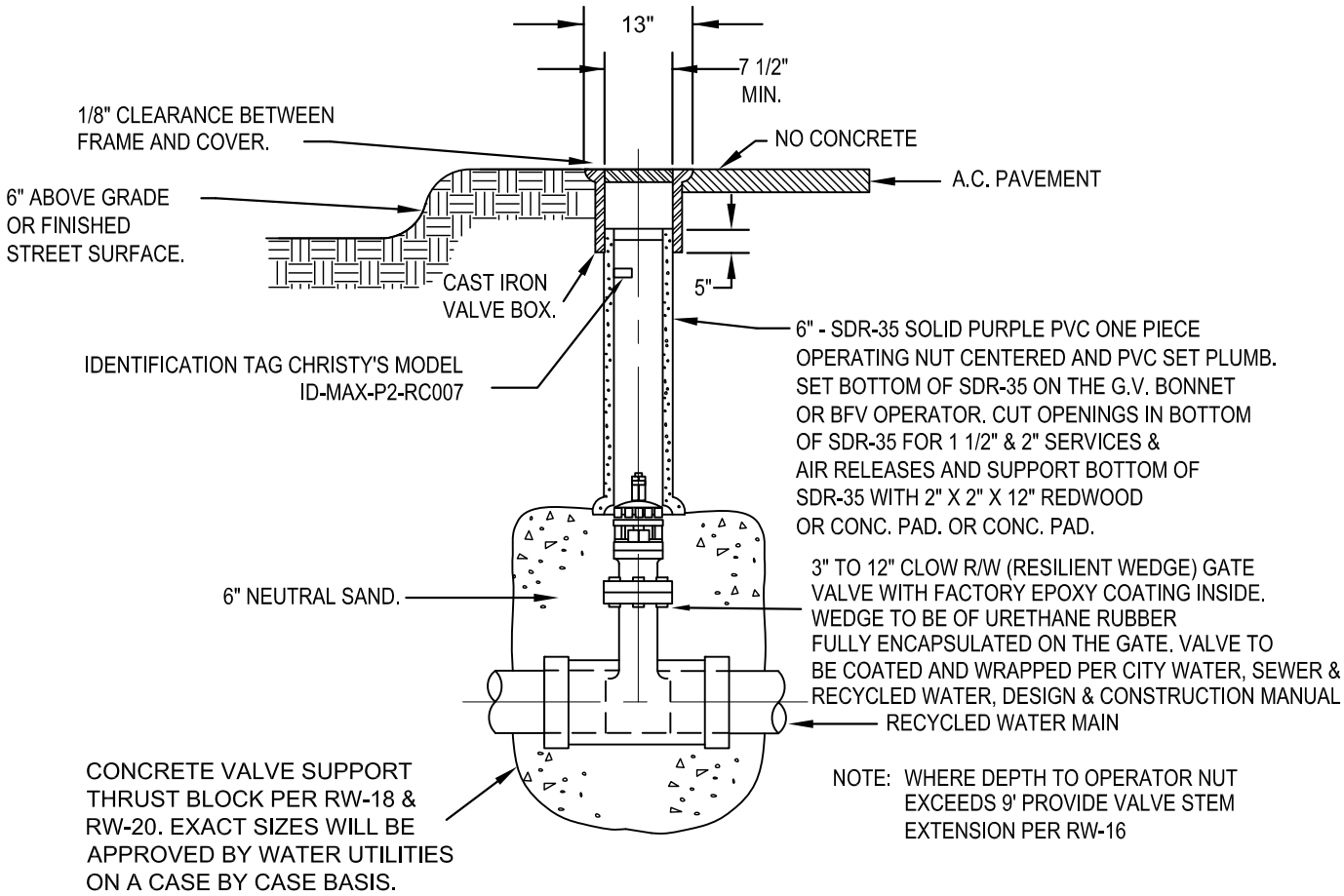

TYPICAL CROSS SECTION

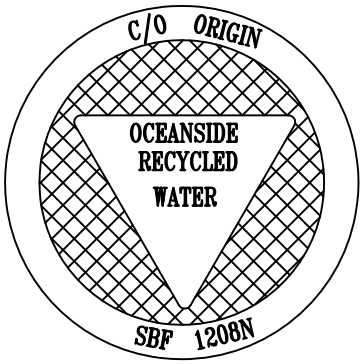

COVER WITH CITY OF OCEANSIDE
WATER DEPT. CASTED ON TOP BY
SOUTH BAY FOUNDRY
FRAME AND COVER (SBTT)

PLAN

Revision	By	Approved	Date
06/14/01	DW		
10/22/02	DW		
08/30/04	AC		
09/29/15	IN		
07/01/17	SM		08/01/17

CITY OF OCEANSIDE

VALVE BOX AND COVERS

Steven E Strapac 9/17/17

CITY ENGINEER Date

STANDARD DRAWING NO. RW-15